Software Engineering
Assignment-8
TYPE OF QUESTION: MCQ/MSQ

Number of questions: **10** **Total mark: 10 X 1 = 10**

QUESTION 1:
Consider the following sequence diagram for the **borrow book** use case.

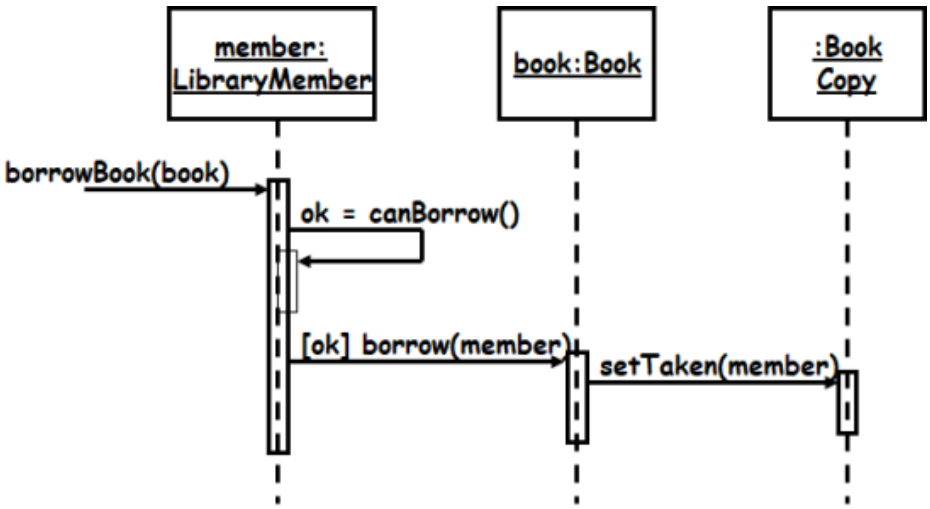

Based on the sequence diagram, which methods will get allocated to the **LibraryMember** class.

a. **borrow**

b. **canBorrow**

c. **borrowBook** and **canBorrow**

d. **borrow**, **borrowBook**, and **canBorrow**

e. **borrow** and **canBorrow**

Correct Answer: c. **borrowBook** and **canBorrow**

Detailed Solution:
The methods entering to (inward arrow) the LibrabyMember class will be allocated to it.

QUESTION 2:

Which one of the following best characterizes a sequence diagram?

a. A call graph illustrating all possible sequences of calls between class method members

b. A time-line illustrating possible sequence of calls made among object methods

c. A time-line illustrating the changes in inheritance and instantiation relationships between classes and objects over time

d. A tree illustrating inheritance relationship between classes

e. A graph indicating the sequence of state changes during a use case execution

Correct Answer: b. A time-line illustrating possible sequence of calls made among object methods

Detailed Solution:

Sequence diagram is the time-line illustration of possible sequence calls made among the object methods in a use case.

QUESTION 3:

Which of the following UML diagrams should you use when allocating use-case behavior to classes?

a. Sequence and communication diagrams

b. Use-case and activity diagrams

c. Sequence and activity diagrams

d. Class and composite structure diagrams

e. State chart and class diagrams

Correct Answer: a. Sequence and communication diagrams

Detailed Solution:

When allocating use-case behavior to classes, you're essentially figuring out:

- Which classes perform which responsibilities, and
- How objects interact to realize a use case

QUESTION 4:

Given the statement: "All rectangles are polygons, but not all polygons are rectangles," what is the most appropriate object-oriented relationship between the Rectangle and Polygon classes?

a. Aggregation

b. Inheritance, with Polygon as the subclass of Rectangle

c. Inheritance, with Rectangle as the subclass of Polygon

d. Composition

e. Association

Correct Answer: c. Inheritance, with Rectangle as the subclass of Polygon

Detailed Solution:
Rectangle *is a* Polygon, But Polygon is not necessarily a Rectangle. This represents an inheritance(is-a) relation.

QUESTION 5:

Consider the statement: “A bank allows its customers to open several types of accounts such as saving account, current account, deposit account, and loan account.” What can be said about the relationship that exists between the **Account** class and **Loan Account** class?

a. Inheritance
b. Aggregation
c. Composition
d. Dependency
e. Association

Correct Answer: a. Inheritance
Detailed Solution:
savings, current, deposit, and loan — are specialized forms of a general Account. This implies an “is-a” relationship

---

QUESTION 6:

Which one of the following is true of unary association?

a. It is defined between multiple classes

b. It is defined on exactly one object

c. It is defined between multiple objects of the same class

d. It is defined between multiple objects of different classes

e. It is defined between two different classes with multiplicity of one

Correct Answer: c. It is defined between multiple objects of the same class

Detailed Solution:

A unary association (also known as reflexive association) is an association within the same class, i.e., between objects of the same class.

QUESTION 7:

Which one of the following can be said of the typical use of a sequence diagram?

a. It is used to model the behavior of a single object when many use cases are executed

b. It is used to model the behavior of several objects when a single use case is executed

c. It is used to model the behavior of a single object when a single use case is executed

d. It is used to model the behavior of several objects when many use cases are executed

e. It is used to model the states and transitions among the states

Correct Answer: b. It is used to model the behavior of several objects when a single use case is executed

Detailed Solution:

A sequence diagram in UML:

- Focuses on object interactions in a time sequence.
- It shows how objects collaborate by sending messages to each other to accomplish a behavior described by a single use case or scenario.
- Each object is represented with a lifeline, and interactions (method calls, returns, etc.) are shown as messages along the timeline.

QUESTION 8:

A library automation software is to be designed. Before a book can be issued to a member, it needs to be checked whether the member has cleared all past dues. Which one of the following mechanisms is most appropriate to factor the **issue book** use case into reserve book and check pending dues use cases?

a. Inheritance

b. Dependency

c. Include

d. Extend

e. Aggregation

Correct Answer: c. Include

Detailed Solution:

In Use Case Modeling, the <<include>> relationship is used when one use case always uses the behavior of another use case as part of its process.

QUESTION 9:

Which one of the following is true of an object-oriented design solution incorporating a deep inheritance hierarchy?

a. It is a sign of a good design as it increases reuse

b. It is a sign of a good design as it leads to the realization of sophisticated and versatile classes at the leaf level

c. It is a good design as it makes the most of the inheritance feature

d. It is a sign of good design as it increases the scope for additional polymorphic bindings

e. It is a sign of bad design as it breaks encapsulation

Correct Answer: e. It is a sign of bad design as it breaks encapsulation

Detailed Solution:

A deep inheritance hierarchy in object-oriented design is generally considered a sign of poor design, as it breaks encapsulation.

QUESTION 10:

Consider the following UML sequence diagram. Based on the given sequence diagram, which one of the following methods should be implemented by the Controller class?

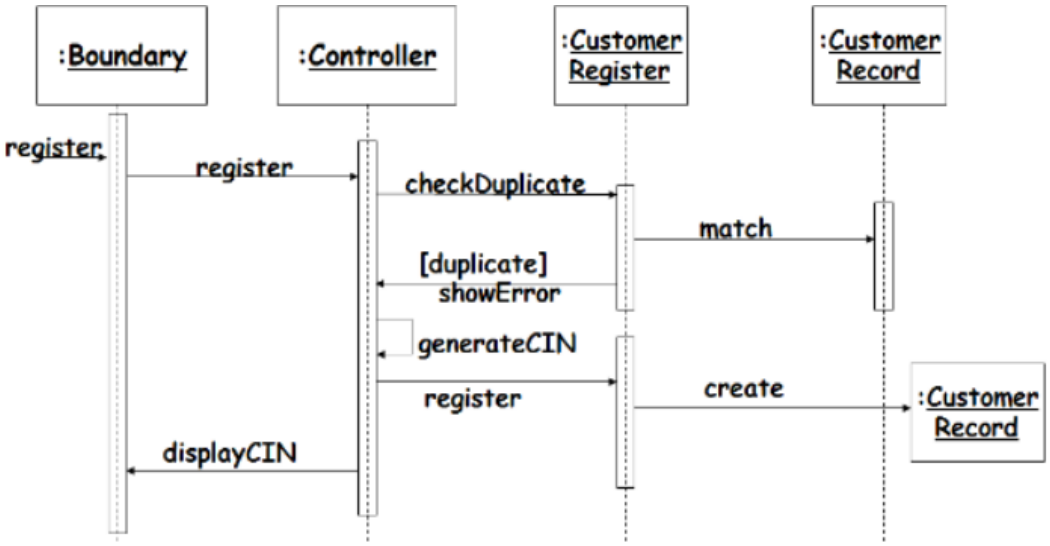

a. register

b. register, checkDuplicate

c. register, showError, generateCIN

d. displayCIN, checkDuplicate, register

e. displayCIN, checkDuplicate, register, create

Correct Answer: c. register, showError, generateCIN

Detailed Solution:

The methods entering to (inward arrow) the Controller class will be allocated to it.